RMU Series

105°C, Standard, Radial Leads

- High Temperature Radial Type, 105°C, 2000 hours assured Load Life
- Applications: Communications equipment, switching regulartors, and industrial applications

Characteristics

Voltage Range	6.3 to 100 VDC	160 to 450 VDC
Capacitance Range	0.47 to 22,000µF	0.47 to 1,000µF
Temperature Range	-40 to +105°C	-25 to +105°C
Capacitance Tolerance	±20% at 120Hz, 20°C (10% Tol. is available upon request)	
Leakage Current	I ≤ 0.01CV or 3µA , whichever is greater 3 minutes after Rated Voltage is applied	I ≤ 0.03CV or 3µA , whichever is greater 3 minutes after Rated Voltage is applied

Dissipation Factor (tan δ) Max.

Rated Voltage (V)	6.3	10	16	25	35	50	63	100
D.F. (tan δ)	0.22	0.20	0.16	0.14	0.12	0.10	0.09	0.08

Rated Voltage (V)	160	200	250	350	400	450
D.F. (tan δ)	0.12	0.14	0.17	0.20	0.25	0.25

When the capacitance exceeds 1,000µF, 0.02 shall be added every 1,000µF increase.

Stability at Low Temperature (at 120Hz)

Impedance ratio shall not exceed the values given in the table below.

Rated Voltage (V)	6.3	10	16	25-63	160-200	250	350	400-450
Z(-25°C) / Z(+20°C)	4	3	2	2	2	3	5	6
Z(-40°C) / Z(+20°C)	8	6	4	3	-	-	-	-

Load Life

After the rated voltage has been applied for 2,000 hours at 105°C

Capacitance Change	Within ±20% of initial value
D.F. (tan δ)	150% or less of initial specified value
Leakage Current	less than initial specified value

Shelf Life

After storage for 500 hours at 105°C, with no voltage applied and being stabilized at +20°C, Capacitor shall meet the limit specified in load life.

Dimensions (Units:mm)

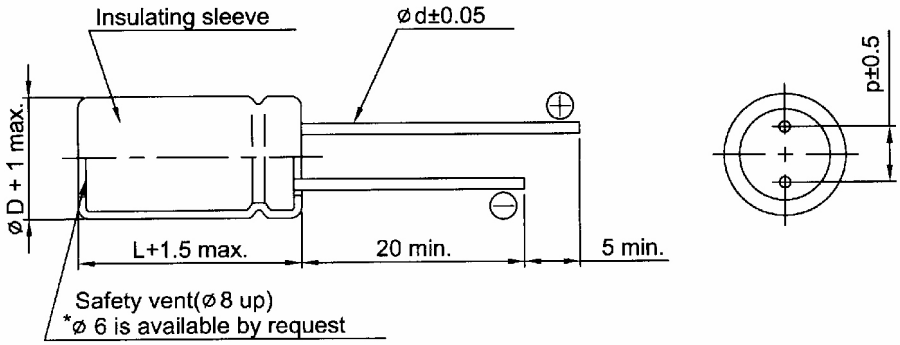

DØ	5.0	6.3	8.0	10	13	16	18	22
p	2.0	2.5	3.5	5.0	5.0	7.5	7.5	10
dØ	0.5	0.5	0.5	0.6	0.6	0.8	0.8	0.8

Ripple Current Coefficient

Frequency (Hz)	50 (60)	120	400	1K	10K	100K
Cap. (µF) / Hz	Multiplier					
Cap. ≤ 10	0.8	1	1.30	1.45	1.65	1.70
10 < Cap. ≤ 100	0.8	1	1.23	1.36	1.48	1.53
100 < Cap. ≤ 1000	0.8	1	1.16	1.25	1.35	1.38
1000 < Cap.	0.8	1	1.11	1.17	1.25	1.28

RMU Series

105°C, Standard, Radial Leads

Case Size of Standard Products & Maximum Ripple Current (mA rms 105°C 120KHz)

VDC	6.3V		10V		16V		25V		35V		50V		63V	
Cap. µF	Size	R.C.	Size	R.C.	Size	R.C.	Size	R.C.	Size	R.C.	Size	R.C.	Size	R.C.
0.47											5x11	7	5x11	8
1.0											5x11	12	5x11	13
2.2											5x11	20	5x11	20
3.3											5x11	25	5x11	28
4.7											5x11	30	5x11	32
10					5x11	35	5x11	38	5x11	46	5x11	50	5x11	42
22					5x11	54	5x11	57	5x11	61	5x11	60	6.3x11	82
33					5x11	64	5x11	69	5x11	75	5x11 6.3x11	75 100	6.3x11	100
47			5x11	70	5x11	100	5x11	105	5x11 6.3x11	105 110	6.3x11	115	6.3x11 8x12	125 140
68			5x11	80	5x11	105	6.3x11	120	6.3x11	140	6.3x11 8x12	130 155	8x12 10x13	155 185
100	5x11	96	5x11	105	5x11	125	6.3x11	135	6.3x11 8x12	160 175	8x12	200	10x13	230
150	5x11	120	5x11 6.3x11	120 145	6.3x11	170	6.3x11 8x12	180 200	8x12	215	10x13	245	10x16	270
220	5x11	160	6.3x11	175	6.3x11	215	8x12	230	8x14 10x13	255 300	10x13 10x16	345 360	10x16 10x21	375 400
330	6.3x11	195	6.3x11 8x12	205 255	6.3x11 8x12	225 265	8x12 10x13	310 335	10x13 10x16	400 440	10x16 10x21	450 470	13x21	580
470	6.3x11 8x12	230 270	6.3x11 8x12	235 290	8x11 10x13	310 370	10x13 10x16	410 440	10x16 10x21	500 520	10x21 13x21	600 650	13x21 13x26	690 700
680	8x12	360	8x12	365	10x13	480	10x16	520	10x21 13x21	560 650	13x21 13x26	700 770	16x26	880
1000	10x13	460	10x13	550	10x16 10x21	590 640	10x21 13x21	710 770	13x21 13x26	830 920	13x26 16x26	890 1080	16x31.5	1210
1500	10x16	625	10x16	770	10x20	820	13x21	900	13x26	960	16x31.5	1300	18x31.5	1350
2200	10x16 10x21	750 810	10x21	860	13x21	1000	13x25 16x26	1090 1170	16x26 16x31.5	1290 1350	16x31.5 16x35.5	1480 1530	18x36	1610
3300	13x21	960	13x21	1100	13x26 16x26	1200 1300	16x26	1460	16x36	1650	18x36	1750		
4700	13x21 13x26	1150 1330	13x26	1350	16x26	1600	16x36	1780	18x36	1900	22x41	2500		
6800	13x26	1450	16x26	1670	16x31.5	1900	18x36	1950						
10000	16x26	1680	16x36	1900	18x36	2060								
15000	16x36	2075	18x36	2180										
22000	18x41	2300												

RMU Series

105°C, Standard, Radial Leads

Case Size of Standard Products & Maximum Ripple Current (mA rms 105°C 120KHz)

VDC	100V		160V		200V		250V		350V		400V		450V	
Cap. µF	Size	R.C.	Size	R.C.	Size	R.C.	Size	R.C.	Size	R.C.	Size	R.C.	Size	R.C.
0.47	5x11	10	5x11	12	5x11	12	5x11	12	6.3x11	13	6.3x11	14	6.3x11	14
1.0	5x11	15	5x11 6.3x11	17 19	6.3x11	17	6.3x11	17	6.3x11	20	6.3x12 8x12	17 20	8x12	20
2.2	5x11	23	6.3x11	25	6.3x11	25	6.3x11 8x12	20 25	8x12	31	8x12 10x13	35 40	8x12 10x13	30 35
3.3	5x11	32	6.3x11	32	6.3x11 8x12	33 35	8x12	42	8x12 10x13	46 50	8x12 10x13	36 41	10x13 10x16	38 42
4.7	5x11	37	6.3x11 8x12	38 42	6.3x11 8x12	42 50	8x12 10x13	46 50	8x12 10x13	47 52	10x13 10x16	55 65	10x16 10x21	50 60
6.8	6.3x11	47	8x12	56	8x12 10x13	60 63	8x12 10x13	60 70	10x13	79	10x16	84	10x16 10x21	65 72
10	6.3x11	56	8x12 10x13	63 75	8x12 10x13	78 85	8x12 10x13	68 80	10x16 10x21	87 92	10x21 13x21	111 125	13x21 13x26	80 87
22	6.3x11 8x12	75 96	10x13 10x16	95 105	10x16 10x21	105 130	10x21 13x21	110 140	13x21 13x26	130 160	13x26 16x26	160 190	16x26 16x31.5	165 200
33	8x12 10x13	140 155	10x16 10x21	155 170	10x21 13x21	180 190	13x21	190	13x26 16x26	200 220	13x26 16x26	220 235	16x31.5 16x36	210 230
47	10x13 10x16	160 170	10x21 13x21	180 210	13x21 13x26	165 220	13x26 16x26	220 240	16x26 16x31.5	245 260	16x25 16x31.5 16x36	240 250 275	16x36 18x31.5	260 290
68	10x16	240	13x21 16x26	360 280	13x21 13x26	270 300	13x26 16x26	310 355	16x31.5	370	16x31.5 16x36	450 480	18x31.5 18x36	460 470
100	10x21 13x21	245 280	13x26 16x26	310 330	13x26 16x26	320 345	16x26 16x31.5	365 395	18x31.5 18x36	375 390	18x31.5 18x36	530 550	18x36 18x41	525 560
150	13x21 13x26	340 360	16x26	470	16x26 16x31.5	440 480	16x36 18x31.5	460 460	18x41	420	18x36 18x41	610 650	22x41	650
220	13x26 16x26	450 520	16x31.5 16x36	560 580	16x36 18x31.5	670 690	18x36 22x41	650 700						
330	16x26	690	18x31.5 18x36	660 700	18x31.5 18x36	750 810								
470	16x26 16x31.5	820 860	18x36 18x41	810 860	18x41 22x41	840 925								
680	16x36 18x31.5	920 950												
1000	18x41	1200												