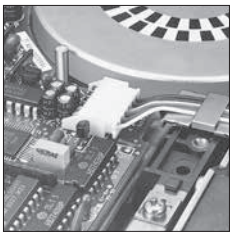

XH CONNECTOR

2.5 mm pitch/Wire-to-Board connectors/Crimp style and Mating style

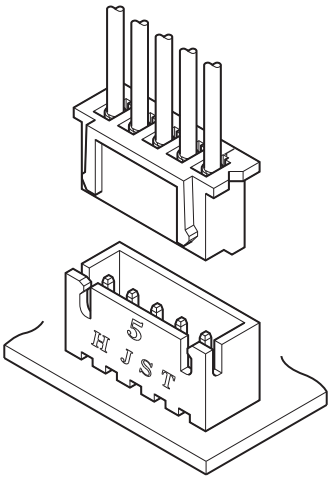

Highly reliable, versatile 2.5 mm pitch wire-to-board connector with an assembled board height of 9.8 mm for low profile applications.

- Original double-leaf contact design
- Box-shaped shrouded header
- Header is also available with boss
- The 4 pin version conforms to JEMA's Home Automation (HA terminal) standards.

■ Specifications

- Current rating: 3 A AC/DC (AWG #22)
- Voltage rating: 250 V AC/DC
- Temperature range: −25℃ to +85℃
  (including temperature rise in applying electrical current)
- Contact resistance:
  Initial value/ 10 mΩ max.
  After environmental tests/ 20 mΩ max.
- Insulation resistance: 1,000 MΩ min.
- Withstanding voltage:
  There shall be no breakdown or flashover while applying 1,000 VAC for one minute.
- Applicable wire range:
  Conductor size/ AWG #30 to AWG #22
  Insulation O.D./ φ 0.9 mm to φ 1.9 mm
- Applicable PC board thickness: 1.6 mm

∗ Please refer to the "Handling Precautions for Terminals and Connectors" on our website (listed in the “Technical Documents” column on the Product Information page) before use.
∗ RoHS2 compliance
∗ Dimensional unit: mm
∗ Contact JST for details.

■ Standards

For information on overseas standard registrations, please refer to the "List of Registered Overseas Standards" on our website (listed in the “Technical Documents” column on the Product Information page).
∗ Specifications registered to overseas standards may differ from the general specifications listed above.

PC board layout and Assembly layout

Top entry type

<Single circuit>

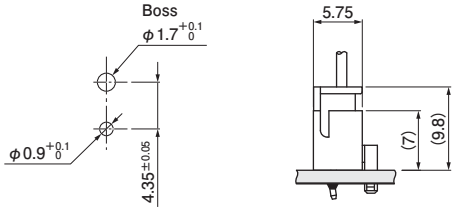

<2 circuits or more>

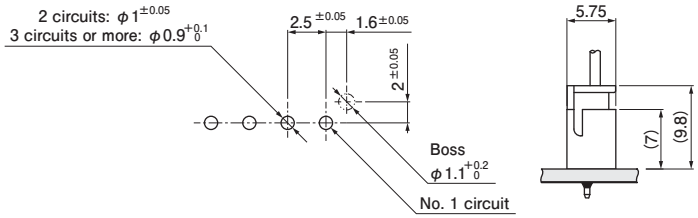

Side entry type

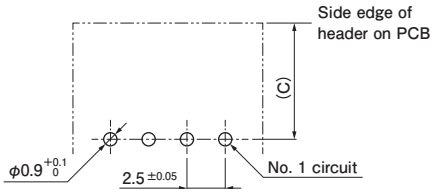

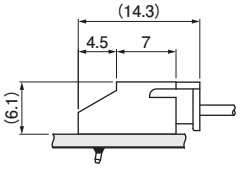

Note: 1. The PC board layout figure shown is viewed from the connector mounting surface.
2. Tolerance for the PCB hole pitch shall be ± 0.05 and shall not accumulate.
3. Dimension C: See “Header/ Side entry type” section on page 4.
4. Hole dimensions differ depending on the type of PCB and PCB drilling method.
When using PCB made of hard material composed of fiberglass cloth, please consider a larger hole diameter.
The above dimensions are reference values. Please contact JST for details.

PC board layout and Assembly layout/ PA 66 (Glass-filled) type, Radial tape type

Top entry type

<2 circuits>

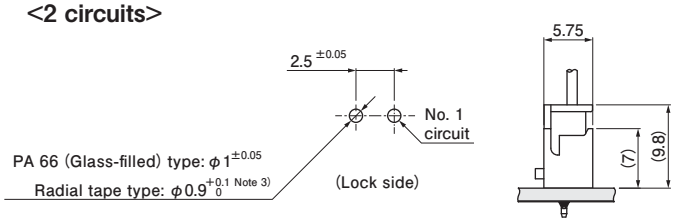

<3 to 8 circuits>

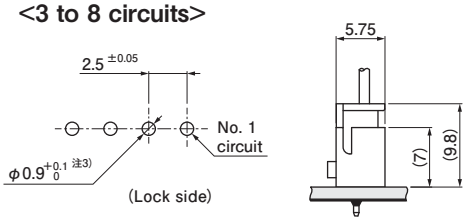

<9 circuits or more>

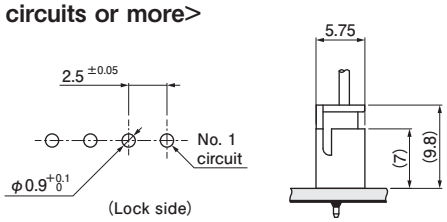

Note: 1. The PC board layout figure shown is viewed from the connector mounting surface.
2. Tolerance for the PCB hole pitch shall be ± 0.05 and shall not accumulate.
3. Radial tape style packaging conforms to PCB hole diameter specifications on the automatic insertion machine.
4. Hole dimensions differ depending on the type of PCB and PCB drilling method.
When using PCB made of hard material composed of fiberglass cloth with glass-filled PA 66,
please consider a larger hole diameter.
The above dimensions are reference values. Please contact JST for details.

PC board layout and Assembly layout/ SMT type

Side entry type

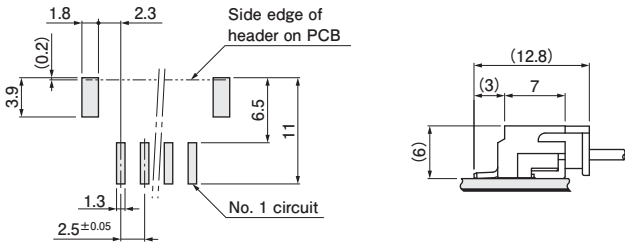

Note: 1. The PC board layout figure shown is viewed from the connector mounting surface.
2. Tolerance for the PCB pattern pitch shall be ± 0.05 and shall not accumulate.
3. The above dimensions are reference values. Please contact JST for details.

Contact

Shape A

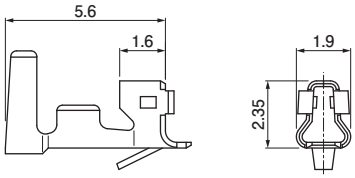

Shape B

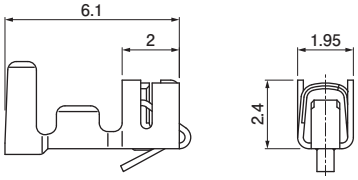

Shape	Model No.	Applicable wire range		Q'ty/ reel
		Conductor size AWG (mm²)	Insulation O.D. (mm)	
A	**SXH-001T-P0.6N**	#26 to #22 (0.13 to 0.33)	1.3 to 1.9	5,000
B	**SXH-002T-P0.6**	#30 to #26 (0.05 to 0.13)	0.9 to 1.3	8,000
	SXH-001T-P0.6	#28 to #22 (0.08 to 0.33)	0.9 to 1.9	

Material and Surface finish, etc.
Phosphor bronze, tin-plated

Note: 1. Contact JST for gold-plated products.
2. Contact JST also if you require shielded wires, thin wires or other special wires.
3. SXH-001T-P0.6N is low-insertion force type contact, for easier insertion/withdrawal, which would be less resistant to the vibration.

Crimping machine

Contact	Crimping machine	Applicator	Crimp applicator with dies
SXH-001T-P0.6N	AP-K2N	MKS-L	APLMK SXH001-06N
SXH-002T-P0.6			APLMK SXH002-06
SXH-001T-P0.6			APLMK SXH001-06

Note: Contact JST for fully automatic crimping applicator.

Housing

<Single circuit>

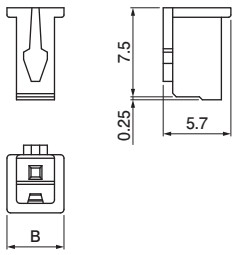

<2 to 16, 20 circuits>

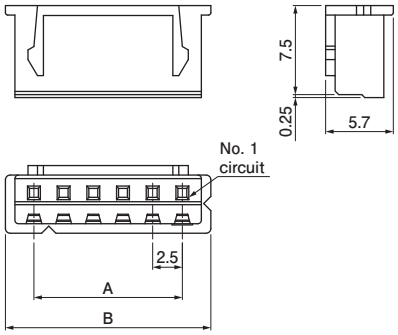

Plugged up hole

<2 circuits, 10 mm pitch>

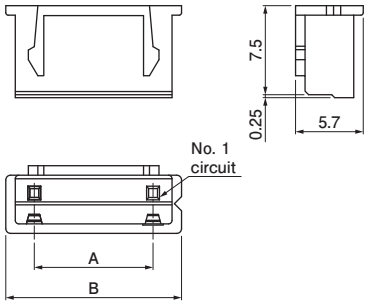

<6 circuits, 5 mm pitch>

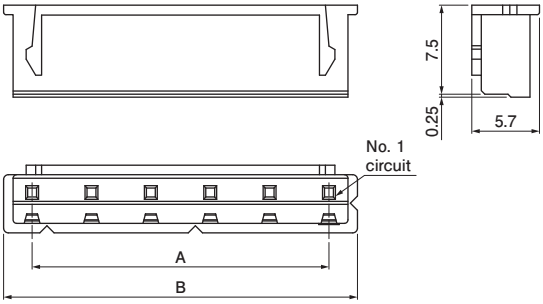

No. of circuits	Model No.	Dimensions (mm)		Q'ty/bag
		A	B	
1	**XHP-1**	—	4.8	1,000
2	**XHP-2**	2.5	7.3	1,000
Note 1) 2	**XHP-2(10.0)-U**	10.0	14.8	1,000
3	**XHP-3**	5.0	9.8	1,000
4	**XHP-4**	7.5	12.3	1,000
5	**XHP-5**	10.0	14.8	1,000
6	**XHP-6**	12.5	17.3	1,000
Note 2) 6	**XHP-6(5.0)-U**	25.0	29.8	1,000
7	**XHP-7**	15.0	19.8	1,000
8	**XHP-8**	17.5	22.3	1,000
9	**XHP-9**	20.0	24.8	1,000
10	**XHP-10**	22.5	27.3	1,000
11	**XHP-11**	25.0	29.8	1,000
12	**XHP-12**	27.5	32.3	1,000
13	**XHP-13**	30.0	34.8	1,000
14	**XHP-14**	32.5	37.3	1,000
15	**XHP-15**	35.0	39.8	1,000
16	**XHP-16**	37.5	42.3	1,000
20	**XHP-20**	47.5	52.3	500

Material and Surface finish, etc.
PA 6, natural (white)

Note: 1. XHP-2(10.0)-U means the 2-circuits housing with 10.0 mm pitch, and 3-circuits of 5-circuits are filled with the resin.
2. XHP-6(5.0)-U means the 6-circuits housing with 5.0 mm pitch and each even number circuit is filled with the resin.
3. For flame retardant grade of resin material used, please refer to the "List of Registered Overseas Standards" on our website (listed in the "Technical Documents" column on the Product Information page).

Header

Top entry type
<Single circuit>

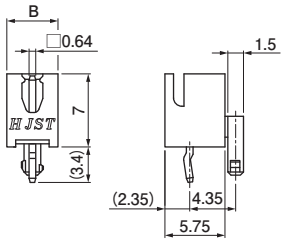

<2 circuits>

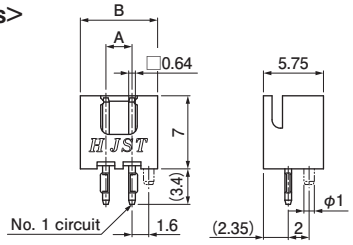

<3 circuits or more>

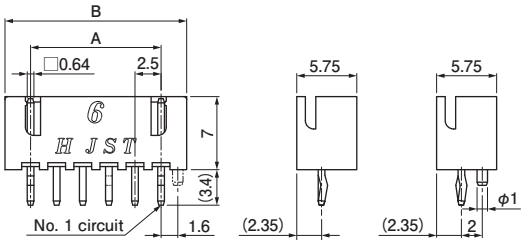

Top entry type, plugged up hole
<2 circuits, 10 mm pitch>

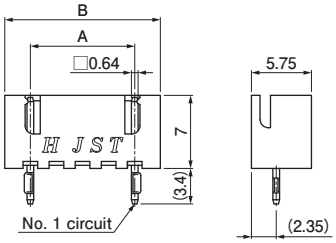

Side entry type
<2 circuits>

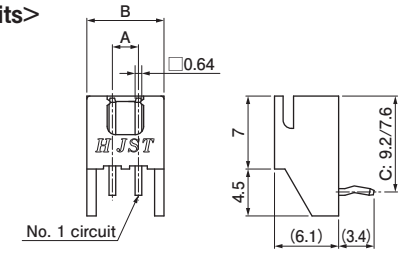

<3 circuits or more>

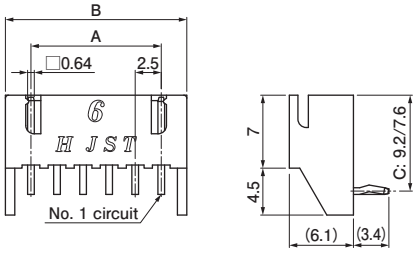

Top entry type

No. of circuits	Model No.		Dimensions (mm)		Q'ty/box	
	Without boss	With boss	A	B	Without boss	With boss
1	—	B1B-XH-AM	—	4.9	—	1,000
2	B2B-XH-A	B2B-XH-AM	2.5	7.4	1,000	1,000
2	B2(10.0)B-XH-A-U Note2)	—	10.0	14.9	1,000	—
3	B3B-XH-A	B3B-XH-AM	5.0	9.9	1,000	1,000
4	B4B-XH-A	B4B-XH-AM	7.5	12.4	500	500
5	B5B-XH-A	B5B-XH-AM	10.0	14.9	500	500
6	B6B-XH-A	B6B-XH-AM	12.5	17.4	500	500
7	B7B-XH-A	B7B-XH-AM	15.0	19.9	500	500
8	B8B-XH-A	B8B-XH-AM	17.5	22.4	250	250
9	B9B-XH-A	B9B-XH-AM	20.0	24.9	250	250
10	B10B-XH-A	B10B-XH-AM	22.5	27.4	250	250
11	B11B-XH-A	—	25.0	29.9	250	—
12	B12B-XH-A	B12B-XH-AM	27.5	32.4	250	250
13	B13B-XH-A	—	30.0	34.9	250	—
14	B14B-XH-A	—	32.5	37.4	250	—
15	B15B-XH-A	—	35.0	39.9	250	—
16	B16B-XH-A	—	37.5	42.4	200	—
20	B20B-XH-A	—	47.5	52.4	100	—

Material and Surface finish, etc.
Post: Brass, copper-undercoated, tin-plated Wafer: PA 66, natural (white)

Note: 1. This product displays (LF)(SN) on a label.
2. B2(10.0)B-XH-A-U means the 2-circuits housing with 10.0 mm pitch, and 3-circuits of 5-circuits are filled with the resin.
3. For flame retardant grade of resin material used, please refer to the "List of Registered Overseas Standards" on our website (listed in the "Technical Documents" column on the Product Information page).

Side entry type

No. of circuits	Model No.		Dimensions (mm)		Q'ty/box
	C: 9.2 (mm)	C: 7.6 (mm)	A	B	
2	S2B-XH-A	S2B-XH-A-1	2.5	7.4	1,000
3	S3B-XH-A	S3B-XH-A-1	5.0	9.9	1,000
4	S4B-XH-A	S4B-XH-A-1	7.5	12.4	500
5	S5B-XH-A	S5B-XH-A-1	10.0	14.9	500
6	S6B-XH-A	S6B-XH-A-1	12.5	17.4	500
7	S7B-XH-A	S7B-XH-A-1	15.0	19.9	250
8	S8B-XH-A	S8B-XH-A-1	17.5	22.4	250
9	S9B-XH-A	S9B-XH-A-1	20.0	24.9	250
10	S10B-XH-A	S10B-XH-A-1	22.5	27.4	250
11	S11B-XH-A	S11B-XH-A-1	25.0	29.9	250
12	S12B-XH-A	S12B-XH-A-1	27.5	32.4	200
13	S13B-XH-A	S13B-XH-A-1	30.0	34.9	200
14	S14B-XH-A	S14B-XH-A-1	32.5	37.4	200
15	S15B-XH-A	S15B-XH-A-1	35.0	39.9	100
16	S16B-XH-A	—	37.5	42.4	100

Material and Surface finish, etc.
Post: Brass, copper-undercoated, tin-plated Wafer: PA 66, natural (white)

Note: 1. This product displays (LF)(SN) on a label.
2. For flame retardant grade of resin material used, please refer to the "List of Registered Overseas Standards" on our website (listed in the "Technical Documents" column on the Product Information page).

Header/ PA 66 (Glass-filled) type

Top entry type

<2 circuits>

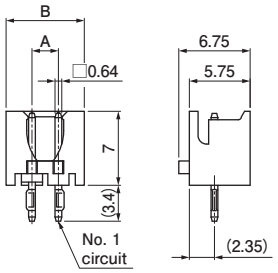

<3 to 8 circuits>

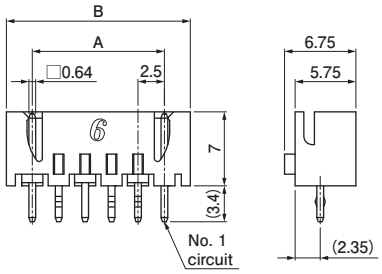

<9 circuits or more>

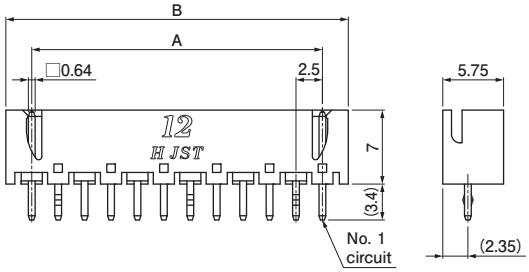

No. of circuits	Model No.	Dimensions (mm)		Q'ty/box
		A	B	
2	**B2B-XH-2**	2.5	7.4	1,000
3	**B3B-XH-2**	5.0	9.9	1,000
4	**B4B-XH-2**	7.5	12.4	500
5	**B5B-XH-2**	10.0	14.9	500
6	**B6B-XH-2**	12.5	17.4	500
7	**B7B-XH-2**	15.0	19.9	500
8	**B8B-XH-2**	17.5	22.4	250
9	**B9B-XH-2**	20.0	24.9	250
10	**B10B-XH-2**	22.5	27.4	250
11	**B11B-XH-2**	25.0	29.9	250
12	**B12B-XH-2**	27.5	32.4	250
13	**B13B-XH-2**	30.0	34.9	250
14	**B14B-XH-2**	32.5	37.4	250
15	**B15B-XH-2**	35.0	39.9	250

Material and Surface finish, etc.

Post: Brass, copper-undercoated, tin-plated
Wafer: PA 66 (Glass-filled), natural (ivory)

Note: 1. This product displays (LF)(SN) on a label.
2. For flame retardant grade of resin material used, please refer to the "List of Registered Overseas Standards" on our website (listed in the "Technical Documents" column on the Product Information page).

Header/ SMT type

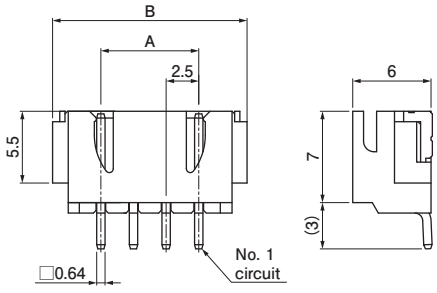

No. of circuits	Model No.	Dimensions (mm)		Q'ty/reel
		A	B	
3	**S3B-XH-SM4-TB**	5.0	12.5	500
4	**S4B-XH-SM4-TB**	7.5	15.0	500
6	**S6B-XH-SM4-TB**	12.5	20.0	500

Material and Surface finish, etc.

Post: Copper alloy, copper-undercoated, tin-plated
Wafer: Modified PA 6T, natural (ivory)
Solder tab: Brass, copper-undercoated, tin-plated

Note: 1. This product displays (LF)(SN) on a label.
2. This product is supplied on embossed tape and reel packaging.
3. For flame retardant grade of resin material used, please refer to the "List of Registered Overseas Standards" on our website (listed in the "Technical Documents" column on the Product Information page).

Header/ Radial tape type

PA 66 type
<3, 4 circuits>

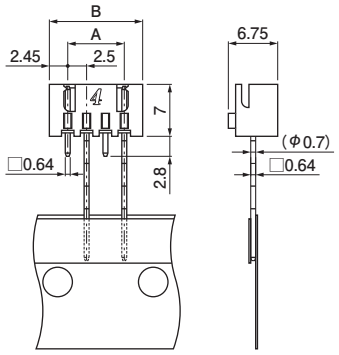

PA 66 (Glass-filled) type
<2 circuits>

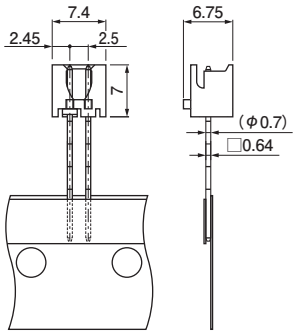

<3 to 8 circuits>

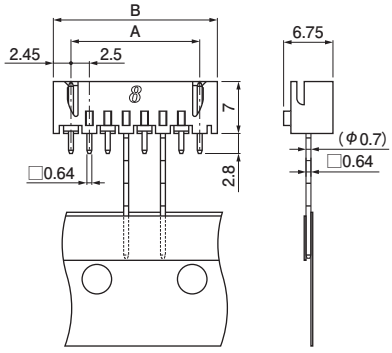

No. of circuits	Model No.		Dimensions (mm)		Q'ty/box
	PA 66 type	PA 66 (Glass-filled) type	A	B	
2	—	**B2B-XH-2-TV4**	—	—	1,000
3	**B3B-XH-TV4**	**B3B-XH-2-TV4**	5.0	9.9	1,000
4	**B4B-XH-TV4**	**B4B-XH-2-TV4**	7.5	12.4	500
5	—	**B5B-XH-2-TV4**	10.0	14.9	500
6	—	**B6B-XH-2-TV4**	12.5	17.4	500
7	—	**B7B-XH-2-TV4**	15.0	19.9	500
8	—	**B8B-XH-2-TV4**	17.5	22.4	500

Material and Surface finish, etc.
Post: Brass, copper-undercoated, tin-plated Wafer: PA 66 type/ PA 66, natural (white) PA 66 (Glass-filled) type/ PA 66 (Glass-filled), natural (ivory)

Note: 1. This product displays (LF)(SN) on a label.
2. For flame retardant grade of resin material used, please refer to the "List of Registered Overseas Standards" on our website (listed in the "Technical Documents" column on the Product Information page).

Taping specifications

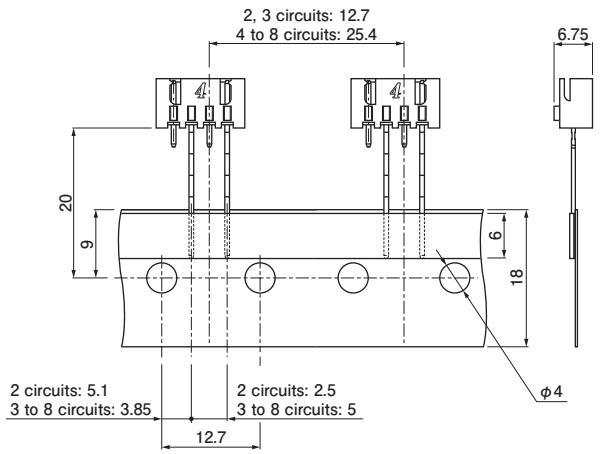

Note: Conforms to IEC 60286-2 (JIC C 0806-2) "Tape packaging of components with unidirectional leads on continuous tapes".

Packaging specifications

Distance between the end of the tape and the first connector's center line (either end)

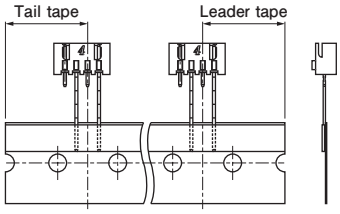

Packaging style		Flat pack (zigzag folded)
Distance between folds		24 index holes per fold (304.8 mm)
Box size		316 (W) × 45 (D) × 330 (H) mm
Distance between the end of the tape and the first connector's center line (either end)		19.05 mm
Quantity per package	2, 3 circuits	1,000 pcs./box
	4 to 8 circuits	500 pcs./box

Note: Products of different packaging specifications are also available. Contact JST for details.

Model number allocation

Contact

S XH - 001 T - P 0.6 □

- Supply form: Strip form
- Series name
- Applicable wire range:
  - Normal type
    - 002…AWG #30 to AWG #26
    - 001…AWG #28 to AWG #22
  - Low insertion force type
    - 001…AWG #26 to AWG #22
- Surface finish: Tin-plated
- Material: Phosphor bronze
- Applicable post size
- Type: Blank…Normal type, N…Low insertion force type

Housing

XH P - 5 - □

- Series name
- Type: Plug
- No. of circuits
- Color: Blank…Natural (White), BK…Black, R…Red, E…Blue, Y…Yellow, L…Lemon yellow, M…Green, N…Brown, FY…Fluorescent yellow

Model number allocation

Housing/ Plugged up hole

XH P - 2 (10.0) - U

- Series name
- Type: Plug
- No. of circuits
- Pitch
- Sub model number

Header

B 5 B - XH - A □ - □

- Header type: B…Top entry type
  S…Side entry type
- No. of circuits
- Assembly product
- Series name
- Clinched (Kinked) / Not clinched: Clinched
- Presence of boss: Blank…Without boss, M…With boss
- Color: Blank…Natural (White), BK…Black, R…Red, E…Blue, Y…Yellow, L…Lemon yellow, M…Green, N…Brown, FY…Fluorescent yellow, D…Orange

Header/ Plugged up hole

B 2 (10.0) B - XH - A - U - □

- Header type: Top entry type
- No. of circuits
- Pitch
- Assembly product
- Series name
- Clinched (Kinked) / Not clinched: Clinched
- Sub model number
- Color: Blank…Natural (White), R…Red, E…Blue

Header/ PA 66 (Glass-filled) type

B 5 B - XH - 2 - □

- Header type: Top entry type
- No. of circuits
- Assembly product
- Series name
- Housing material: PA 66 (Glass-filled)
- Color: Blank…Natural (Ivory), C…Black, R…Red, E…Blue, Y…Yellow, M…Green

Header/ SMT type

S 3 B - XH - SM 4 - □ - TB

- Header type: Side entry type
- No. of circuits
- Assembly product
- Series name
- Termination style: SMT
- Product version number
- Color: Blank…Natural (Ivory), M…Green
- Packaging style: Embossed taping

Header/ Radial tape type

B 3 B - XH - 2 - T V4 - □

- Header type: Top entry type
- No. of circuits
- Assembly product
- Series name
- Housing material: Blank…PA 66
  2…PA 66 (Glass-filled)
- Packaging style: Radial tape
- Radial tape lead style: Partially rounded rectangular leads
- Color: PA 66 type
  Blank…Natural (White), BK…Black, R…Red, E…Blue, Y…Yellow, M…Green
  PA 66 (Glass-filled) type
  Blank…Natural (Ivory), BK…Black, R…Red, E…Blue, Y…Yellow, M…Green